National Higher School of Autonomous Systems Technology
Preparatory Cycle, 2nd Year
February 2026

Strength of Materials

Tutorial Series 2 : Geometric Characteristics of Plane Sections

Exercise 1

Determine the centroid's coordinates for each of the plane sections represented in Figure 1.

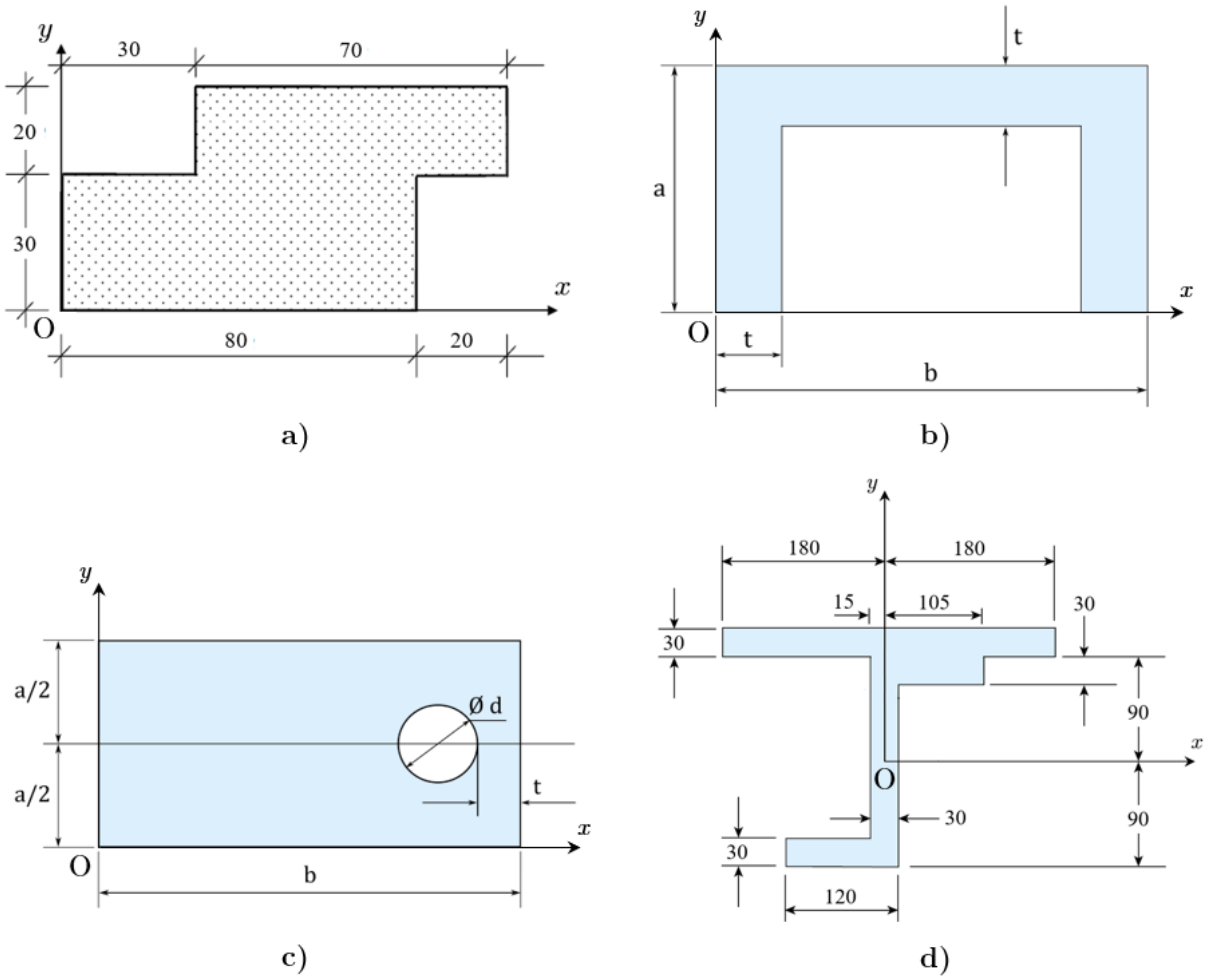

Figure 1

Exercise 2

Consider the L–shaped cross–section shown in Figure 2 below.

1. Calculate the first moments Q_x and Q_y.
2. Find the position of the centroid C.
3. Calculate the moments of inertia I_x, I_y, and the product of inertia I_{xy} of the area.

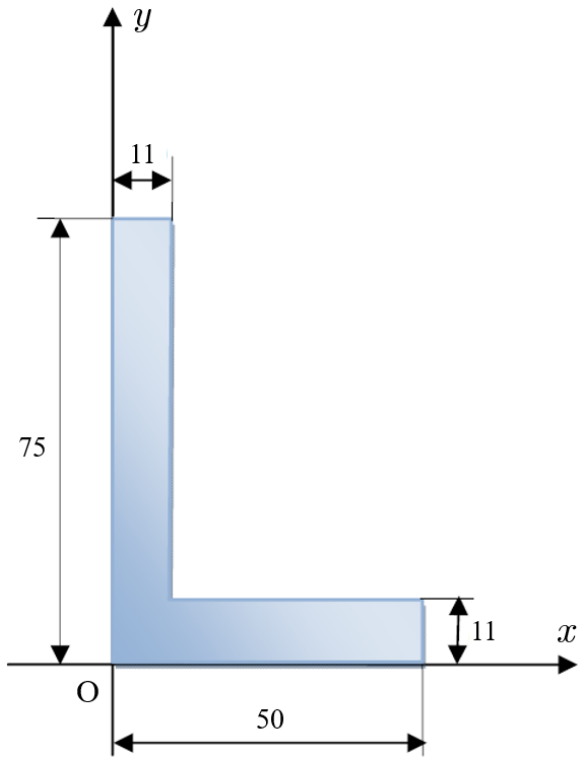

Figure 2

Exercise 3

Figure 3 depicts a cross–section bounded by the x–axis, the y–axis, and the quarter circle OAB.

1. Locate the centroid C of the area.
2. Calculate the moments of inertia I_x, I_y, and the product of inertia I_{xy}.
3. Find the polar moment of inertia of the area.
4. Calculate the radii of gyration r_x and r_y.

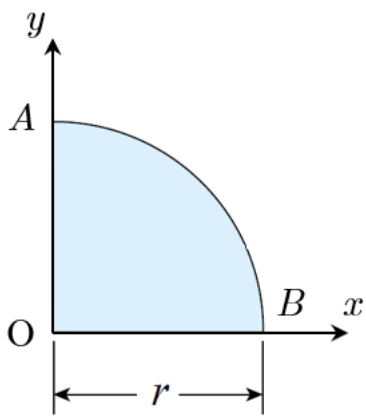

Figure 3

Exercise 4

The geometric properties of the randomly shaped cross–section shown in Figure 4 are the following : $I_x = 10^7\ mm^4$, $I_y = 20 \times 10^6\ mm^4$, and $I_{xy} = 12 \times 10^6\ mm^4$.

1. Using the transformation equations, calculate the moments of inertia I_u, I_v, and the product of inertia I_{uv}.

   u and v are the centroidal axes obtained by rotating the x and y–axes by an angle $\theta = 20°$, respectively.

2. Compute the principal centroidal moments of inertia.

3. Determine the principal centroidal directions.

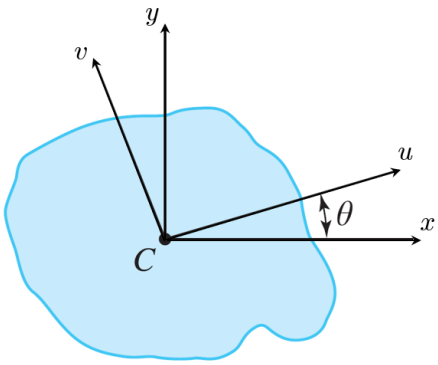

Figure 4

Exercise 5

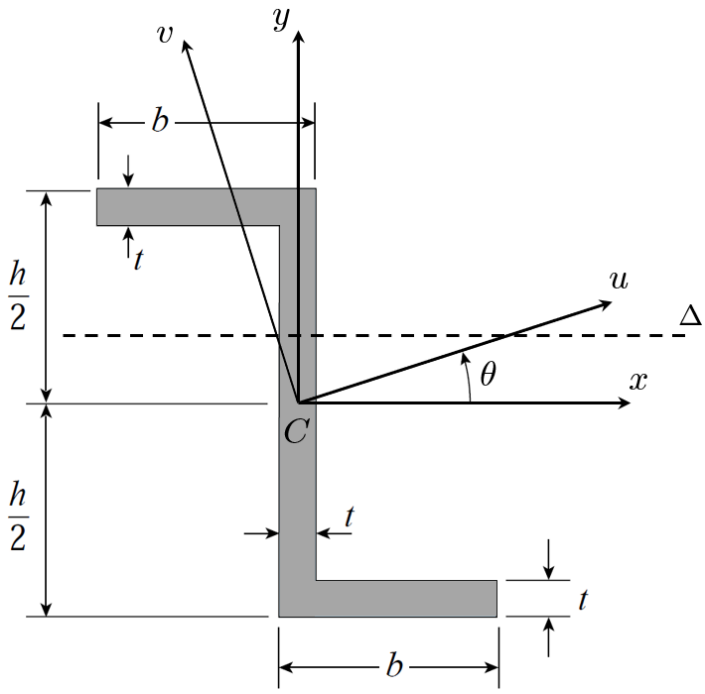

Figure 5

For the Z–section shown in Figure 5 above :

1. Calculate the centroidal moments of inertia and product of inertia.

2. Using the parallel–axis theorem, calculate the moment of inertia with respect to the axis Δ.

   Δ is the horizontal axis that is offset from the x–axis by 21 mm in the positive y–direction.

3. Find the moments of inertia and product of inertia with respect to the centroidal uv axes if $\theta = 30°$.

4. Calculate the principal centroidal moments of inertia.

5. Determine the angles defining the orientations of the principal axes through the centroid C.

Use the following numerical data : $h = 130\ mm$, $b = 70\ mm$, and $t = 9\ mm$.